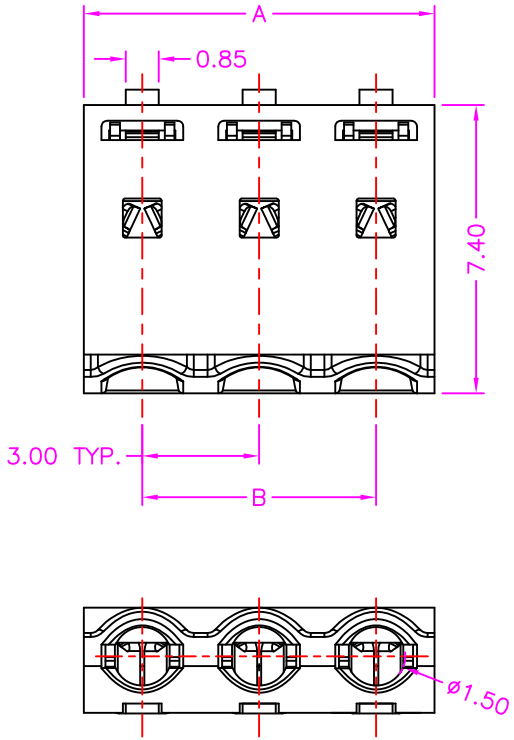

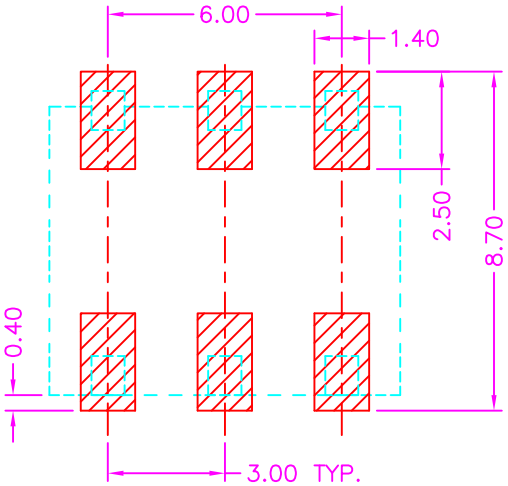

P.C.B LAYOUT
TOP VIEW ±0.05

TABLE

POS.	A	B
1	3.00	
2	6.00	3.00
3	9.00	6.00

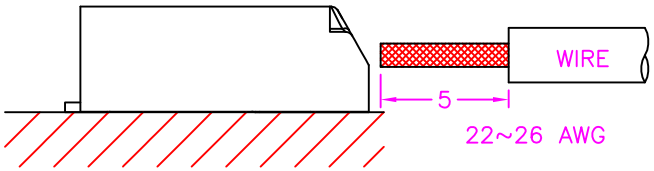

ASSEMBLY

MATERIALS

HOUSING: HI-TEMP. PLASTIC (UL 94V-0), BEIGE
TERMINAL: COPPER ALLOY, TIN PLATING

SPECIFICATION

CURRENT RATING: 2 AMP MAX
DIELECTRIC WITHSTANDING: 800V AC FOR ONE MINUTE
CONTACT RESISTANCE: 20m OHMS MAX
INSULATION RESISTANCE: 800M OHMS MIN AT DC 500V
OPERATION TEMPERATURE: -40°C~+110°C
APPLICABLE: AWG #22~#26

PART NUMBER:
APKCA - * * T - 1 2 2

SERIES
NO. OF POS. REF. TABLE
TIN PLATING ON TERMINAL
TAPE REEL PACKAGE

ZICONN ELECTRONIC CO., LTD. WWW.ZICONN.COM 886-3-4687695	TOLERANCES X.±0.40 .XX±0.20 .X±0.30 .XXX±0.10	REV.	A	DRAWED BY	Zhong 2018/9/19	TITLE	POKE HOME, 3.00mm PITCH, PCB MOUNT, SMT, FEMALE (AWG #22~#26)		
				APPROVED BY	Lion 2018/9/19	DRAW NO.	APKCA-002	UNIT	MM	Sheet	1/1

C0214